LW600N
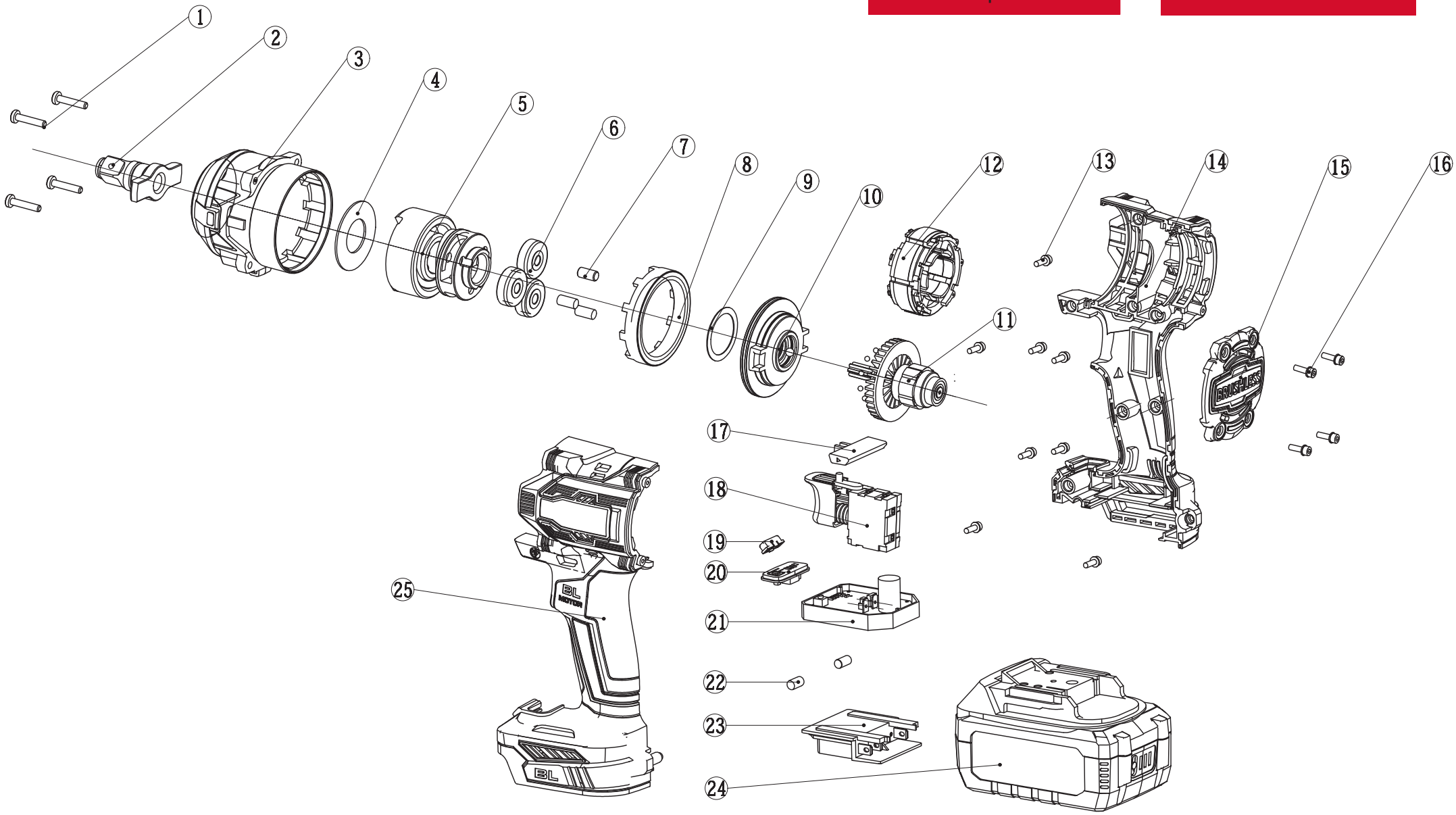
Cordless Impact Wrench